VOLVO SERVICE

PART 4

POWER TRANSMISSION

C3-series

SERVICE MANUAL

CONTENTS

GROUP 40 GENERAL

Data 1
Special tools 5
Description 6

GROUP 41 CLUTCH

Description 1
Service Procedures 1
Clutch work in vehicle 1
Clutch pedal 1
Clutch wire 1
Reconditioning 2
Illustration A 5

GROUP 42 MANUAL GEARBOX

Description 1
Service Procedures 5
Work on transmission in vehicle 5
Auxiliary gearbox 5
Gearbox 10
Removing 10
Disassembling 12
Checking and replacing parts 19
Assembling 19
Installing 30
Auxiliary gearbox 32
Removing 32
Disassembling 34
Checking and replacing parts 39
Assembling 39
Installing 49
Illustration A Gearbox 53
B Gearbox 55
C Gearbox 57
D Auxiliary gearbox 59
E Auxiliary gearbox 61

GROUP 45 PROPELLER SHAFTS

Description 1
Service Procedures 1

GROUP 46 REAR AXLE AND FRONT AXLE

Description 1
Service Procedures 4
Differential carriers 4
Work on diff. carriers in vehicle 4
Diff. carriers, diff. locks 4
Replacing diff. carriers 7
Removing front diff. carrier 7
Installing front diff. carrier 8
Removing rear diff. carrier 9
Installing rear diff. carrier 10
Replacing diff. sleeve 11
Disassembling diff. carriers 11
Checking and replacing parts 14
Assembling 14
Wheel Carriers 21
Front wheel carriers 21
Removing wheel carrier 21
Replacing rubber bellows, wheel carrier . . 22
Replacing drive shaft joint 22
Reconditioning drive shaft joint 23
Reconditioning wheel carrier 25
Installing wheel carrier 28
Rear wheel carrier 30
Removing wheel carrier 30
Reconditioning wheel carrier 31
Installing wheel carrier 34
Power take-of 35
Removing 35
Disassembling 35
Assembling 37
Installing 40
Illustration A Differential carriers 41
B Differential carriers 43
C Wheel carriers, front 45
D Wheel carriers, front 47
E Wheel carriers, rear 49
F Wheel carriers, reav 51
G Power take-off 53
H Power take-of 55

GROUP 48 POWER TAKE-OFF

Description 1
Service Procedures 2
Removing 2
Disassembling 3
Checking and replacing parts 6
Assembling 6
Installing 8
Illustration A 9
B 11

GROUP 40 GENERAL

Data

CLUTCH

Clutch type	Single disc, dry plate	
Size	9 1/2"	
Friction surface	456 cm²	
Spring type	Disc spring	
Rivets for clutch lining, number	36	
size	3.6 x 5.2 mm	(0.142–0.205")
Withdrawal lever free play	5 mm	(0.20")
Maximum permissible taper, thrust plate	0.025 mm	(0.0010")

GEARBOX

Type designation	S 4 18/3 ZF	
Reduction ratios:		
1st gear	3.87:1	
2nd gear	2.08:1	
3rd gear	1.39:1	
4th gear	1:1	
reverse	4.16:1	
Shims, bearing – input shaft, alt.	0.5–1.5 (0.020–0.060")	(in stages 0.1 mm – 0.0039")
cover – input shaft, alt.	0.4–1.0 (0.016–0.039")	(in stages 1 mm = 0.0039")
cover – bearing, countershaft, alt.	0.5–1.5 (0.020–0.060")	(in stages 0.1 mm = 0.0039")
cover – bearing, output shaft	0.4–1.0 (0.016–0.039")	(in stages 0.1 mm = 0.0039")
Circlip, output shaft	1.8, 1.9 and 2.0 mm (0.071, 0.075 and 0.080")	
Axial clearances, cover – bearing, input shaft	± 0.05 mm	(0.0020")
bearing – input shaft	0.0 ± 0.1 mm	(0.0039")
cover – bearing, countershaft	+ 0.1 mm	(0.0039")
cover – bearing, output shaft	± 0.05 mm	(0.0020")
Oil change quantity	1.2 litres	(2 pints)
Oil type	Gear oil API-GL-1 SAE 80 or SAE 80/90	

Tightening torques

Nut, output shaft	140–160 Nm	(14–16 kpm = 101–115 lbftf)
Nuts, housing pistons	20– 25 Nm	(2.0–2.5 kpm = 14–18 lbftf)
Allen bolts, housing pistons	8– 12 Nm	(0.8–1.2 kpm = 5.8–8.7 lbftf)
Bolts, front cover	22– 25 Nm	(2.2–2.5 kpm = 15–18 lbftf)
Nuts, clutch casing	41– 51 Nm	(4.1–5.1 kpm = 30–37 lbftf)
Nuts, auxiliary gearbox – gearbox	23– 28 Nm	(2.3–2.8 kpm = 17–20 lbftf)

AUXILIARY GEARBOX

Type designation	FD 51
Reduction ratio:	
Low gear	2.39:1
High gear	1:1
Shims, bearing – rear cover, alt.	0.10, 0.15, 0.35 and 0.50 mm (0.0039, 0.0060, 0.0140 and 0.020"
Circlip, alt.	1.9 and 2.0 mm (0.075 and 0.080")
End play, intermediate gear	0.01–0.05 mm (0.0004–0.0020")
output shaft	0.03–0.08 mm (0.0012–0.0031")
control mechanism flange	0.1 mm (0.0039")
pull rod – cover bolt	approx. 8 mm (0.31") or 5.3 turns
Oil change quantity	1,3 litre ((2,3 pints.)
Oil type	Gear oil API-GL-16 SAE 80 or SAE 80/90
Tightening torques:	
nut, output shaft	100–120 Nm (10–12 kpm = 72–87 lbftf)
nut, countershaft	100–120 Nm (10–12 kpm = 72–87 lbftf)

PROPELLER SHAFTS

Type designation	1300	
Lubricant	Grease MP	
Tightening torque:		
flange bolts	55–65 Nm	(5.5–6.5 kpm = 40–48 lbftf)

DIFFERENTIAL CARRIER

Type designation	EV II	
Reduction ratio	2.91:1	
Shims, spacer sleeve-bearing pinion	0.08 mm	(0.003")
	0.13 mm	(0.005")
	0.25 mm	(0.010")
	0.75 mm	(0.030")
Shims, bearing-pinion	0.08 mm	(0.003")
	0.13 mm	(0.005")
	0.25 mm	(0.010")
Thrust washers, diff. side gears	0.74–0.98 (0.029–0.039")	(in stages 0.04 mr = 0.0016"
Oil change quantity	1.5 litres	(2,6 pints.)
Oil type	Rear axle oil API-GL-5 or MIL-L-2105B, SAE 80	

Tightening torques:		
pinion nuts:	280–300 Nm	(28–30 kpm = 202–217 lbftf)
bolts, crown wheel	80–100 Nm	(8–10 kpm = 58–72 lbftf)
caps	55– 67 Nm	(5.5–6.7 kpm = 40–48 lbftf)

WHEEL CARRIERS

Reduction ratio	2.06:1	
Oil change quantity, wheel carrier, front	0.3 litre	(0,5 pints)
rear	0.4 litre	(0,7 pints)
Oil type:	Gear oil API-GL-1 SAE or SAE 80/90	

Tightening torques:		
bolts, rear axle casing-wheel carrier housing	100–120 Nm	(10–12 kpm = 72–87 lbftf)
front axle casing	100–120 Nm	(10–12 kpm = 72–87 lbftf)

POWER TAKE-OFF, rear axle

Reduction rafio	1:1	
Shims, drivegear	1.25, 1.30, 1.35, 1.40, 1.60, 1.65, 1.85, 1.90, 1.95, 2.00 mm.	
Axial elearances, duivegear bearing	0.03–0.08 mm	
Tightening torques:		
not, out put shatt	100–120 Nm	(10–12 kpm = 72–87 lbftf)
not, drive gear	25–41 Nm	(2.5–4.1 kpm = 15–30 lbftf)

POWER-TAKE-OFF

Reduction rafio	1:1	
Oil change quantityc	0,2 litre	(0,4 pints)
Tightening torques:		
bolf, outpot shaff	41–51 Nm	(4.1–5.1 kpm = 30–37 lbftf)
bolf, front housing and housing half	20–25 Nm	(2.0–2.5 kpm = 14–18 lbftf)

The following special tools are required for work on the clutch, gearbox, auxiliary gearbox, differential carriers, wheel carriers, power take-off differential carriers, power take-off auxiliary gearbox.

		Clutch	Gearbox	Auxiliary gearbox	Diff. carriers	Wheel carriers	Power take-off auxiliary gearbox	Power take-off diff. carriers
1426	Drift	X						
1784	Drift		X				X	
1801	Standard handle	X	X	X	X		X	X
1817	Extractor		X					
1821	Extractor					X		
1845	Press tool			X	X			
2014	Drift		X	X			X	
2022	Sleeve		X	X		X	X	X
2039	Drift			X				
2097	Extractor			X		X		
2116	Puller		X	X				
2132	Drift		X			X		
2261	Extractor		X	X	X		X	X
2267	Drift			X				X
2284	Retainer				X			
2291	Drift			X				
2337	Drift			X				
2370	Extractor				X	X		
2392	Extractor				X			
2395	Drift		X	X	X			
2404	Spanner				X			
2413	Drift					X		
2490	Drift							X
2520	Stand		X	X				
2564	Drift	X	X					
2567	Extractor				X			
2584	Sleeve					X		
2600	Measuring fixture				X			
2636	Holder				X			
2685	Adjusting ring				X			
2686	Press tool				X			
2806	Drift			X	X			
2837	Counterhold			X	X			X
2841	Socket spanner				X			
4030	Extractor	X	X					X
4090	Extractor	X	X					
6011	Drift		X					
6012	Drift		X					
6024	Drift		X					
6100	Extractor		X					
6101	Fixture		X					
6102	Sleeve		X		X			
6103	Press tool		X					
6104	Drift		X					
6105	Drift		X					
6108	Drift		X				X	
6109	Plate			X			X	
6110	Sleeve			X			X	X
6111	Sleeve			X				
6112	Fixture				X			
6113	Measuring tool				X			
6114	Drift				X			
6115	Drift				X			
6116	Drift			X	X			
6117	Sleeve					X		
6120	Guide			X				
6122	Ring			X				X
6126	Bleeder tool				X	X		
6128	Spanner	X	X	X				
6129	Lifting eyelet	X	X	X				
6131	Guide pin				X	X		
6133	Gauge				X	X		
6135	Spanner				X	X		
6136	Lifting tool	X	X	X				
6137	Lifting eyelet		X	X				
6140	Fixture			X				
6141	Separating bolt				X	X	X	
6145	Centring drift	X						
6146	Parallel block				X			

Description

The power transmission for the 2-axle vehicle consists of a clutch, gearbox, auxiliary gearbox, propeller shaft sections and a front and rear axle with differential carries and wheel carries, see Fig. 40–3. In addition to an extra rear axle on 3-axle trucks, there is a power take-off for driving this rear axle. The description and repair instructions for these components are to be found in their respective groups.

In order to prevent dirt and impurities from getting into the evacuation systems in the auxiliary gearbox, gearbox, front and rear axle casings, evacuation is by means of a common hose which runs up to the engine compartment, see Fig. 40–4. Extra sealing has been introduced between the engine and clutch casing and the casing has an evacuation which is connected to the other evacuation system. The sealing between the engine and casing consists of a plate with two washers, see Fig. 40–5. The plate is situated between the oil sump and the engine block and the washers are placed between the reinforcing bracket and the sump, see Fig. 40–6.

The cylinder for engaging the front wheels and the cylinders for operating the differential locks for the front and rear differential carriers are operated by vacuum and for this reason the frame crossmembers have been utilized as vauum reservoirs, see Fig. 40–7.

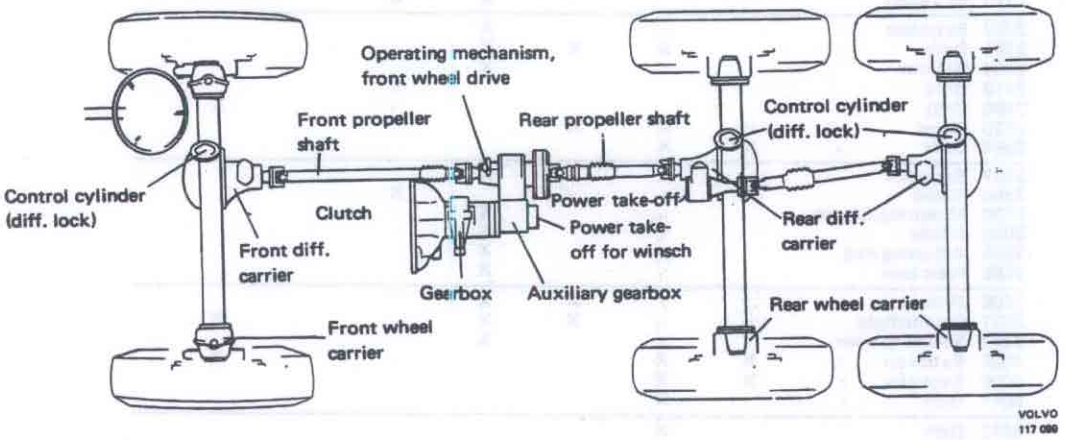

Fig. 40–3. Power transmission

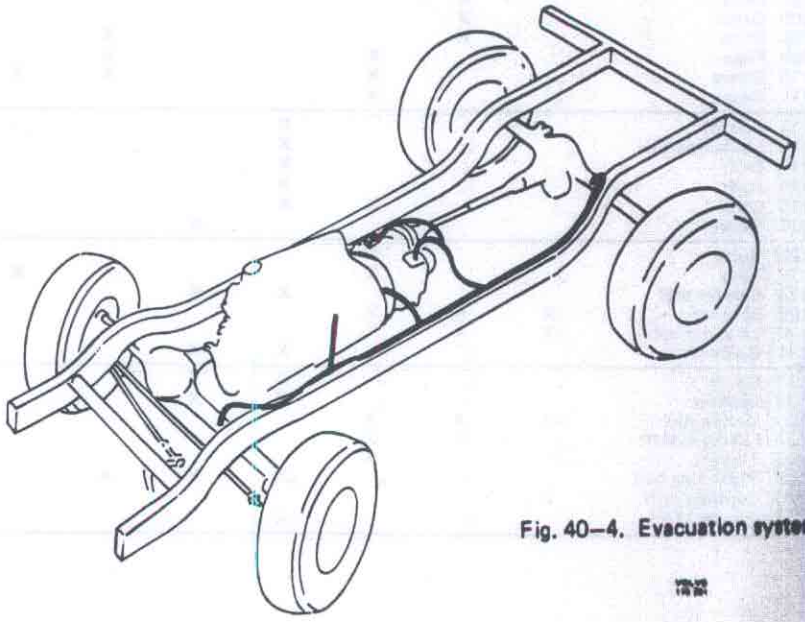

Fig. 40–4. Evacuation systems

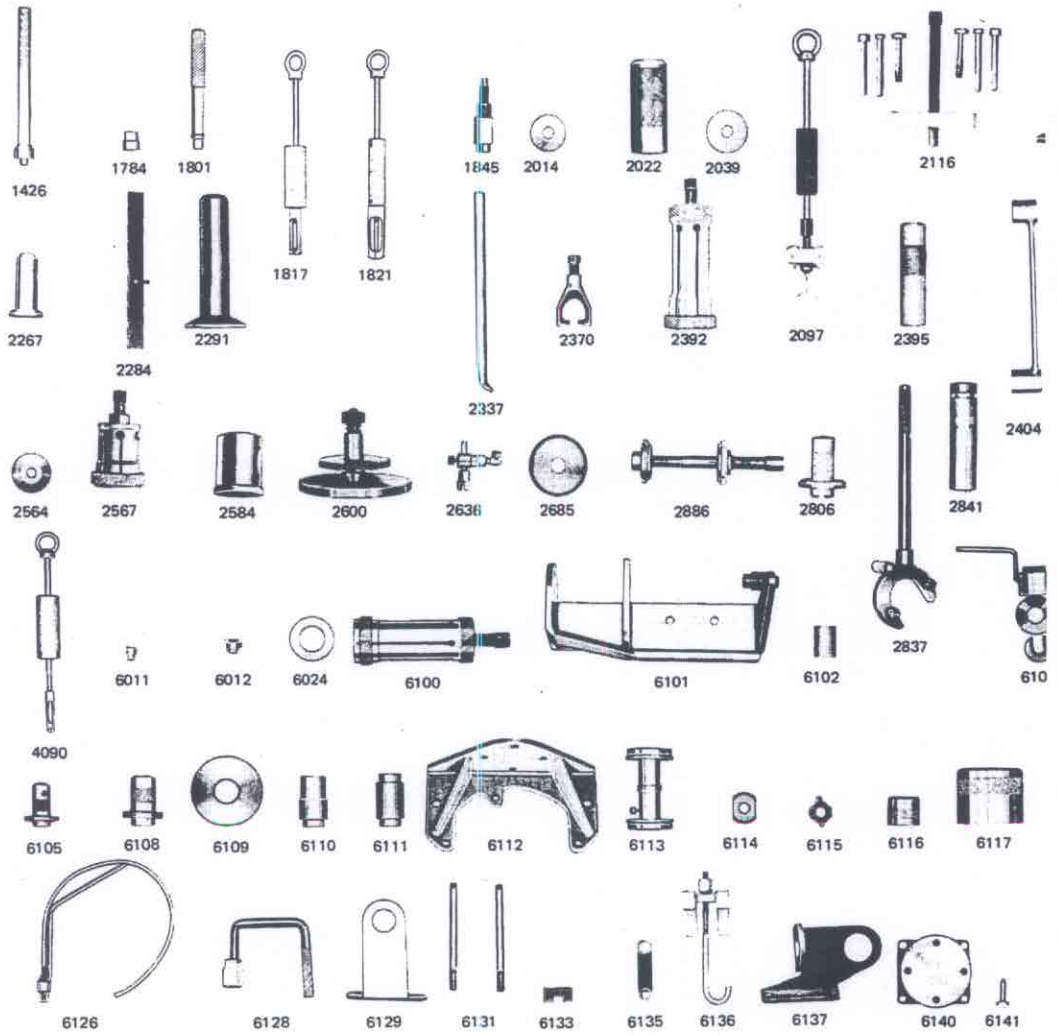

Fig. 41–1. Special tools

Fig. 40–2. Stand 2520 used together with 6101, 6112, 6140